User's Manual

32

RX23T Group

Renesas Starter Kit User's Manual

RENESAS MCU
RX Family / RX200 Series

Renesas Electronics
www.renesas.com

Rev. 1.00 Aug 2015

CAUTION

With reference to Directive 2014/30/EU Article 2, clause 2 (e) this is a custom built evaluation kit destined for professionals to be used solely at research and development facilities for such purposes. This equipment can cause radio frequency noise when used. In such cases, the user/operator of the equipment may be required to take appropriate countermeasures under his responsibility.

CAUTION

This equipment should be handled like a CMOS semiconductor device. The user must take all precautions to avoid build-up of static electricity while working with this equipment. All test and measurement tool including the workbench must be grounded. The user/operator must be grounded using the wrist strap. The connectors and/or device pins should not be touched with bare hands.

EEDT-ST-004-10

For customers in the European Union only

The WEEE (Waste Electrical and Electronic Equipment) regulations put responsibilities on producers for the collection and recycling or disposal of electrical and electronic waste. Return of WEEE under these regulations is applicable in the European Union only. This equipment (including all accessories) is not intended for household use. After use the equipment cannot be disposed of as household waste, and the WEEE must be treated, recycled and disposed of in an environmentally sound manner. Renesas Electronics Europe GmbH can take back end of life equipment, register for this service at http://www.renesas.eu/weee

● 有毒有害物質又は元素の含有表

Table of Toxic and Hazardous Substance and Elements

部品名称 Part Name	有毒有害物質又は元素 Toxic and Hazardous Substance and Elements					
	鉛 Lead (Pb)	水銀 Mercury (Hg)	カドミウム Cadmium (Cd)	六価クロム Hexavalent Chromium (Cr(VI))	ポリ臭化ビフェニル Polybrominated biphenyls (PBB)	ポリ臭化ジフェニルエーテル Polybrominated diphenyl ethers (PBDE)
筐体 Case	O	O	O	O	O	O
ボード Board	X	O	O	O	O	O
ケーブル Cable	X	O	O	O	O	O
ソケット Socket	X	O	O	O	O	O
ＡＣアダプタ AC-Adapter	X	O	O	O	O	O

O: 当該部材の全ての均質材料中における該当有毒有害な物質の含有量がいずれも SJ/T11363-2006 基準に規定する限度量の要求以下であることを表します。

If certain toxic and hazardous substances or elements do not exist in this part, then mark “O” for the corresponding column, which indicates that this toxic and hazardous substance or element contained in all of the homogeneous materials for this part is below the limit requirement in SJ/T11363-2006.

X: 少なくとも当該部材のある均質材料中における当該有毒有害な物質の含有量が SJ/T11363-2006 基準に規定する限度量の要求を上回ることを表します。

If certain toxic and hazardous substance or element is contained in this part, then “X” for the corresponding column, which indicates that this toxic and hazardous substance or element contained in at least one of the homogeneous materials used for this part is above the limit requirement in SJ/T11363-2006. このマークは、中華人民共和国で販売される電子情報製品に適用され、マーク中央の数字は環境保護使用期限の年数です。なお、本製品の年数は、通常に使用された場合の年数です。

This mark is applied to EIPs sold in People's Republic of China, and the number in the center indicates the years of the environment-friendly use period. The years for this product is applicable when the product is used normally.

注）この表には電子情報製品全ての添付品を記載しており、製品によっては同梱されていないものがございますのでご了承下さい。

Notice) All of the attached items relating to 'Electronic Information Products' are listed in this table.
Please understand that there is not always bundled all of the items because it depends on the product.

● 製造年の確認方法に関して **About Confirmation method of produced year**

製品或いは梱包箱に表記された銘板ラベル等から製造年をご確認頂けます。

Please confirm the produced year from nameplate label etc on product body or outer box.

Ex) 2007 年の場合　　**Produced 2007**

● 有毒有害物质或元素 有情况表

Table of Toxic and Hazardous Substance and Elements

部件名称 Part Name	有毒有害物质或元素 Toxic and Hazardous Substance and Elements					
	铅 Lead (Pb)	汞 Mercury (Hg)	镉 Cadmium (Cd)	六价铬 Hexavalent Chromium (Cr(VI))	多溴联苯 Polybrominated biphenyls (PBB)	多溴二苯醚 Polybrominated diphenyl ethers (PBDE)
外壳 Case	O	O	O	O	O	O
电路板 Board	X	O	O	O	O	O
连接线 Cable	X	O	O	O	O	O
插座 Socket	X	O	O	O	O	O
AC 适配器 AC-Adapter	X	O	O	O	O	O

O: 表示该有毒有害物质在该部件所有均质材料中的 量均在 SJ/T11363-2006 标准规定的限量要求以下。

If certain toxic and hazardous substances or elements do not exist in this part, then mark “O” for the corresponding column, which indicates that this toxic and hazardous substance or element contained in all of the homogeneous materials for this part is below the limit requirement in SJ/T11363-2006.

X: 表示该有毒有害物质至少在该部件的某一均质材料中的 量超出 SJ/T11363-2006 标准规定的限量要求。

If certain toxic and hazardous substance or element is contained in this part, then “X” for the corresponding column, which indicates that this toxic and hazardous substance or element contained in at least one of the homogeneous materials used for this part is above the limit requirement in SJ/T11363-2006. 该标识适用于在中华人民共和国境内销售的电子信息产品。 本产品

明年限是组装到整机中，通常情况下能使用的年限。图形中间的数字表示电子信息产品的环保使用期限。

This mark is applied to EIPs sold in People's Republic of China, and the number in the center indicates the years of the environment-friendly use period. The years for this product is applicable when the product is used normally.

特 提示）该表中包括在电子情报产品系列产品所有的附件。产品不同时，包装内的附件会有所不同。

Notice) All of the attached items relating to 'Electronic Information Products' are listed in this table.
Please understand that there is not always bundled all of the items because it is depends on a product.

● 识 生产日期的方法 **About Confirmation method of produced year**

请通过产品或产品外包装箱上的序列号识 生产日期。

Please confirm the produced year from nameplate label etc on product body or outer box.

如**)** 生产日期为 **2007** 年 **Produced 2007**

Disclaimer

By using this Renesas Starter Kit (RSK), the user accepts the following terms:

The RSK is not guaranteed to be error free, and the entire risk as to the results and performance of the RSK is assumed by the User. The RSK is provided by Renesas on an “as is” basis without warranty of any kind whether express or implied, including but not limited to the implied warranties of satisfactory quality, fitness for a particular purpose, title and non-infringement of intellectual property rights with regard to the RSK. Renesas expressly disclaims all such warranties. Renesas or its affiliates shall in no event be liable for any loss of profit, loss of data, loss of contract, loss of business, damage to reputation or goodwill, any economic loss, any reprogramming or recall costs (whether the foregoing losses are direct or indirect) nor shall Renesas or its affiliates be liable for any other direct or indirect special, incidental or consequential damages arising out of or in relation to the use of this RSK, even if Renesas or its affiliates have been advised of the possibility of such damages.

Precautions

The following precautions should be observed when operating any RSK product:

This Renesas Starter Kit is only intended for use in a laboratory environment under ambient temperature and humidity conditions. A safe separation distance should be used between this and any sensitive equipment. Its use outside the laboratory, classroom, study area or similar such area invalidates conformity with the protection requirements of the Electromagnetic Compatibility Directive and could lead to prosecution.

The product generates, uses, and can radiate radio frequency energy and may cause harmful interference to radio communications. However, there is no guarantee that interference will not occur in a particular installation. If this equipment causes harmful interference to radio or television reception, which can be determined by turning the equipment off or on, you are encouraged to try to correct the interference by one or more of the following measures;

- ensure attached cables do not lie across the equipment
- reorient the receiving antenna
- increase the distance between the equipment and the receiver
- connect the equipment into an outlet on a circuit different from that which the receiver is connected
- power down the equipment when not in use
- consult the dealer or an experienced radio/TV technician for help NOTE: It is recommended that wherever possible shielded interface cables are used.

The product is potentially susceptible to certain EMC phenomena. To mitigate against them it is recommended that the following measures be undertaken;

- The user is advised that mobile phones should not be used within 10m of the product when in use.
- The user is advised to take ESD precautions when handling the equipment.

The Renesas Starter Kit does not represent an ideal reference design for an end product and does not fulfil the regulatory standards for an end product.

How to Use This Manual

1. Purpose and Target Readers

This manual is designed to provide the user with an understanding of the RSK hardware functionality, and electrical characteristics. It is intended for users designing sample code on the RSK platform, using the many different incorporated peripheral devices.

The manual comprises of an overview of the capabilities of the RSK product, but does not intend to be a guide to embedded programming or hardware design. Further details regarding setting up the RSK and development environment can found in the tutorial manual.

Particular attention should be paid to the precautionary notes when using the manual. These notes occur within the body of the text, at the end of each section, and in the Usage Notes section.

The revision history summarizes the locations of revisions and additions. It does not list all revisions. Refer to the text of the manual for details.

The following documents apply to the RSKRX23T. Make sure to refer to the latest versions of these documents. The newest versions of the documents listed may be obtained from the Renesas Electronics Web site.

Document Type	Description	Document Title	Document No.
User's Manual	Describes the technical details of the RSK hardware.	RSKRX23T User's Manual	R20UT3318EG
Tutorial Manual	Provides a guide to setting up RSK environment, running sample code and debugging programs.	RSKRX23T Tutorial Manual	CS+: R20UT3319EG e^2 studio: R20UT3322EG
Quick Start Guide	Provides simple instructions to setup the RSK and run the first sample, on a single A4 sheet.	RSKRX23T Quick Start Guide	CS+: R20UT3320EG e^2 studio: R20UT3323EG
Code Generator Tutorial Manual	Provides a guide to code generation and importing into the IDE (Integrated Development Environment).	RSKRX23T Code Generator Tutorial Manual	CS+: R20UT3321EG e^2 studio: R20UT3224EG
Schematics	Full detail circuit schematics of the RSK.	RSKRX23T Schematics	R20UT3317EG
Hardware Manual	Provides technical details of the RX23T microcontroller.	RX23T Group Hardware Manual	R01UH0520EJ

2. List of Abbreviations and Acronyms

Abbreviation	Full Form
ADC	Analog-to-Digital Converter
BC	Battery Charging
bps	Bits per second
CAN	Controller Area Network
CPU	Central Processing Unit
CRC	Cyclic Redundancy Check
DAC	Digital-to-Analog Converter
DIP	Dual In-line Package
DMA	Direct Memory Access
DMAC	Direct Memory Access Controller
DNF	Do Not Fit
E1	Renesas On-chip Debugging Emulator
EEPROM	Electronically Erasable Programmable Read Only Memory
EMC	Electromagnetic Compatibility
ESD	Electrostatic Discharge
GPT	General PWM Timer
I^2C (IIC)	Philips™ Inter-Integrated Circuit Connection Bus
IRQ	Interrupt Request
LCD	Liquid Crystal Display
LED	Light Emitting Diode
LIN	Local Interconnect Network
MCU	Micro-controller Unit
MTU	Multi-Function Timer Pulse Unit
n/a (NA)	Not applicable
n/c (NC)	Not connected
NMI	Non-maskable Interrupt
OTG	On The Go™
PC	Personal Computer
PDC	Parallel Data Capture Unit
PLL	Phase Locked Loop
Pmod™	This is a Digilent Pmod™ Compatible connector. Pmod™ is registered to Digilent Inc. Digilent-Pmod_Interface_Specification
POE	Port Output Enable
PWM	Pulse Width Modulation
RAM	Random Access Memory
ROM	Read Only Memory
RSK	Renesas Starter Kit
RTC	Realtime Clock
SAU	Serial Array Unit
SCI	Serial Communications Interface
SFR	Special Function Registers
SPI	Serial Peripheral Interface
SSI	Serial Sound Interface
TAU	Timer Array Unit
TFT	Thin Film Transistor
TPU	Timer Pulse Unit
UART	Universal Asynchronous Receiver/Transmitter
USB	Universal Serial Bus
WDT	Watchdog timer

Table of Contents

1. Overview

1.1 Purpose

This RSK is an evaluation tool for Renesas microcontrollers. This manual describes the technical details of the RSK hardware. The Quick Start Guide and Tutorial Manual provide details of the software installation and debugging environment.

1.2 Features

This RSK provides an evaluation of the following features:

- Renesas microcontroller programming
- User code debugging
- User circuitry such as switches, LEDs and a potentiometer
- Sample application
- Sample peripheral device initialisation code

The RSK board contains all the circuitry required for microcontroller operation.

1.3 Board specification

Board specification was shown in **Table 1-1** below.

Item	Specification
Microcontroller	Part No : R5F523T5ADFM
	Package : 64-pin LFQFP
	On-Chip Memory : ROM 128KB, RAM 12KB
On-Board Memory	I2C EEPROM : 2Kbit
Input Clock	RX23T Main : 20MHz
	RL78/G1C Main: 12MHz
Power Supply*1	DC Power Jack : 5 V Input
	Power Supply IC : 5V Input, 3.3V Output
Debug Interface	E1 14-pin box header
Push Switch	Reset Switch x 1
	User Switch x 3
Potentiometer (for ADC)	Single-turn, 10kΩ
LED	Power indicator: green x 1
	User : green x 1, orange x 1, red x 2
USB to Serial Converter Interface	Connector : USB-MiniB
	Driver : RL78/G1C Microcontroller (Part No R5F10JBCANA)
Pmod™	PMOD1 : Angle type, 12-pin Connector
	PMOD2*2 : Straight type, 12-pin Connector
Application Board Interface *2	2.54mm pitch, 26-pin x 2 (JA1, JA2), 24-pin x 2 (JA5, JA6)

Table 1-1: Board Specification

*1: Board can also supply 5V into RX23T microcontroller without LDO regulator.
*2: The Application Board Interface connectors are not fitted on this product.

2. Power Supply

2.1 Requirements

This RSK is supplied with an E1 debugger. The debugger is able to power the RSK board with up to 200mA. When the RSK is connected to another system then that system should supply power to the RSK. This board has an optional centre positive supply connector using a 2.0mm barrel power jack.

Details of the external power supply requirements for the RSK, and configuration are shown in **Table 2-2** below. The default RSK power configuration is shown in **bold, blue text.**

Connector	Supply voltage
PWR	Input 5VDC

Table 2-1: PWR Connector Requirements

J6 Setting(DNF)	R139 Setting	Supply Source	Board_VCC UC_VCC	Unavailable Feature
Pin1-2 shorted	DNF	PWR/Unregulated_VCC/CON_5V	3V3	None
		E1(3V3)/CON_3V3	3V3	None
All open	**Fit**	PWR/Unregulated_VCC/CON_5V	3V3	None
		E1(3V3)/CON3V3	**3V3**	**None**
Pin2-3 shorted	DNF	PWR/Unregulated_VCC/CON_5V	5V	Pmod
		E1(5V)	5V	Pmod

Table 2-2: Main Power Supply Requirements

The main power supply connected to PWR should supply a minimum of 5W to ensure full functionality.

2.2 Power-Up Behaviour

When the RSK is purchased, the RSK board has the 'Release' build of the example tutorial software pre-programmed into the Renesas microcontroller. Please consult the 'Renesas Starter Kit Code Generator Tutorial Manual' for further information of this example.

3. Board Layout

3.1 Component Layout

Figure 3-1 below shows the top component layout of the board.

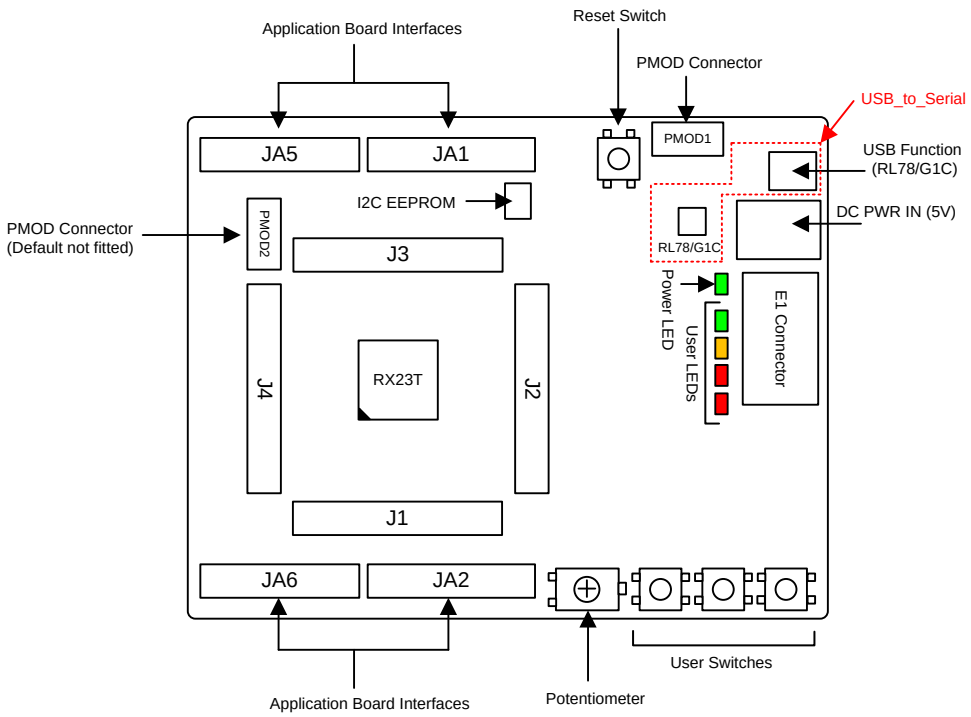

Figure 3-1: Board Layout

3.2 Board Dimensions

Figure 3-2 below gives the board dimensions and connector positions. All the through-hole connectors are on a common 0.1 inch grid for easy interfacing.

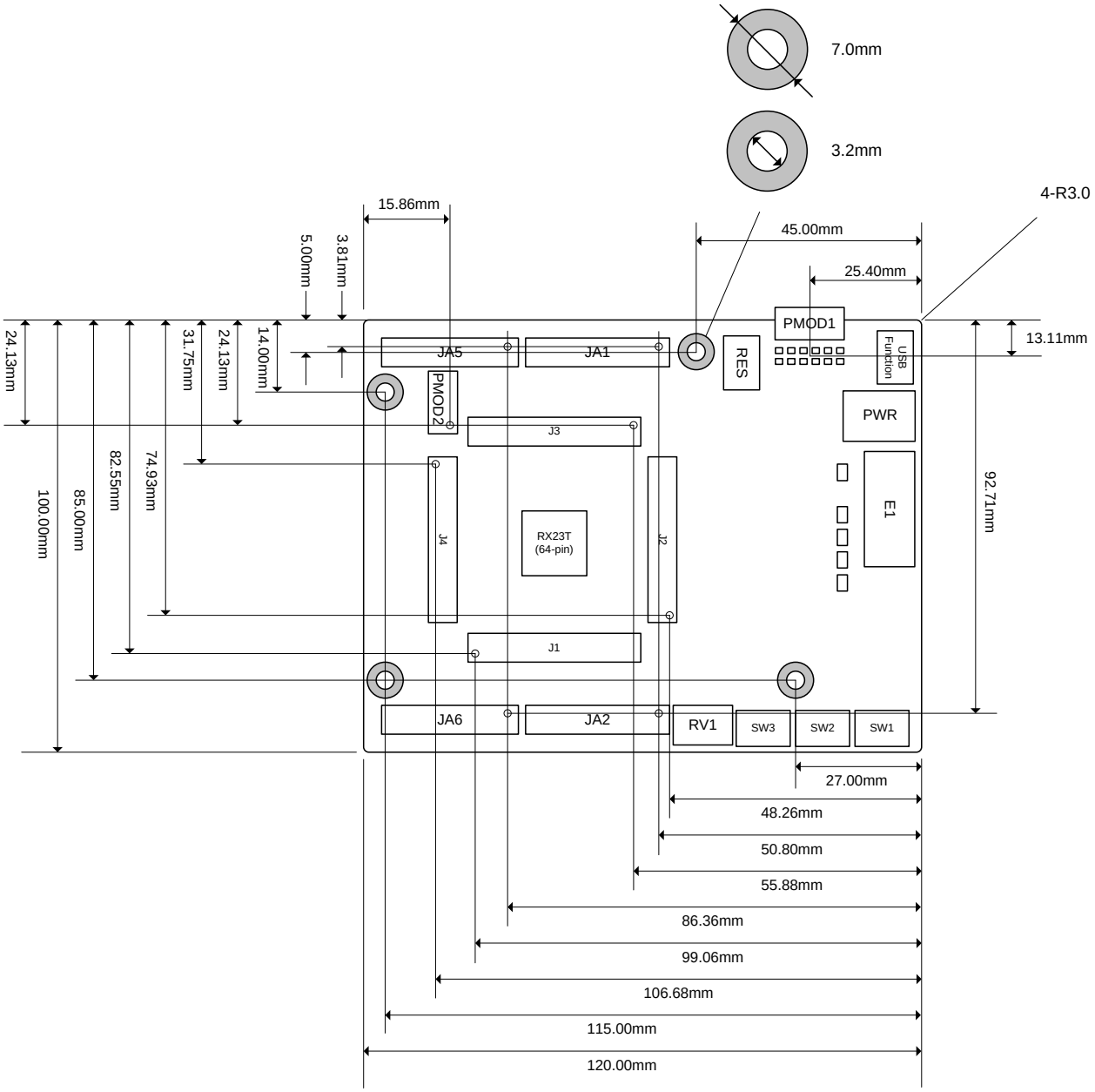

Figure 3-2: Board Dimensions

3.3 Component Placement

Figure 3-3 below shows placement of individual components on the top-side PCB – bottom-side component placement can be seen in **Figure 3-4**. Component types and values are shown on the board schematics.

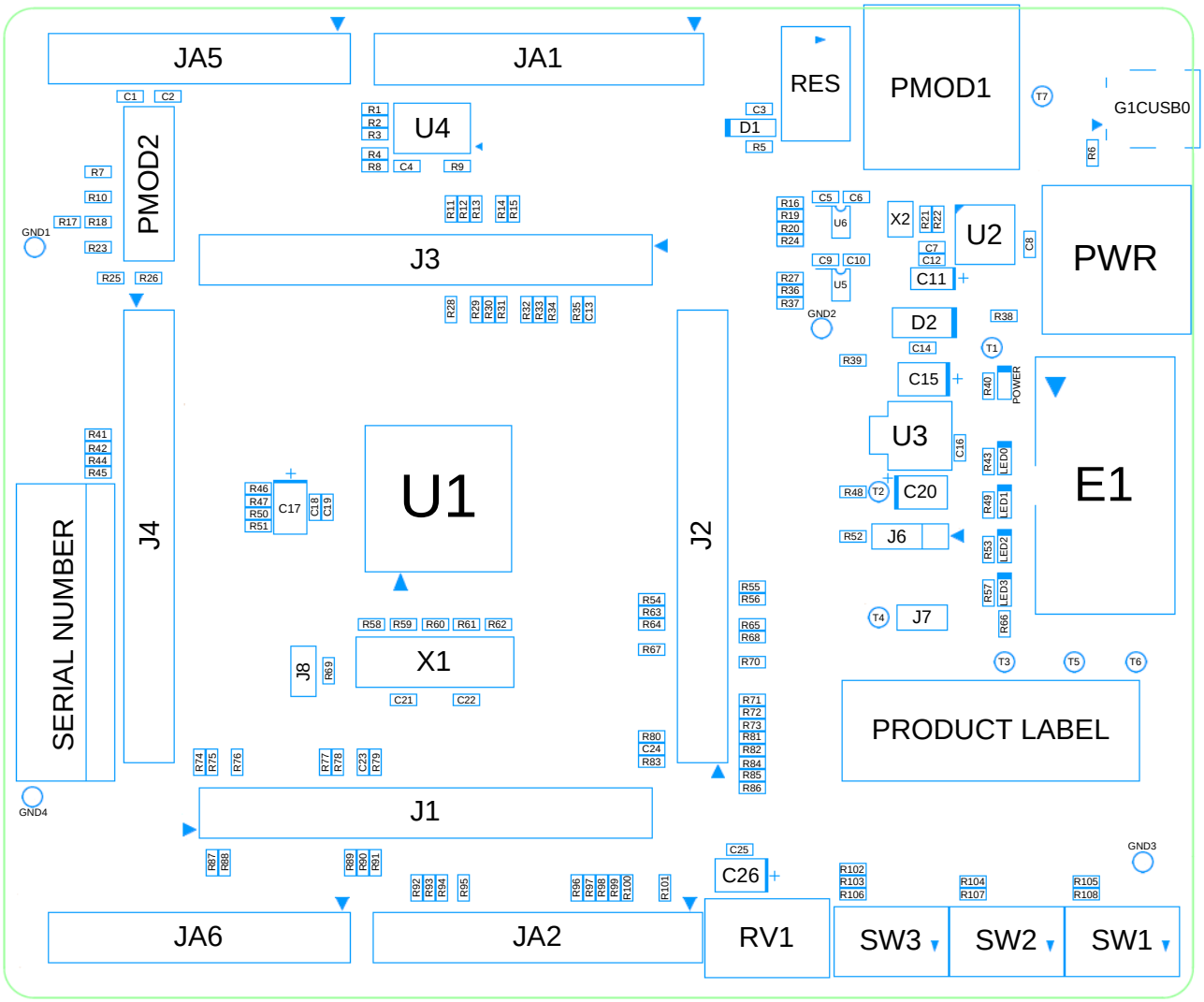

Figure 3-3 Top-Side Component Placement

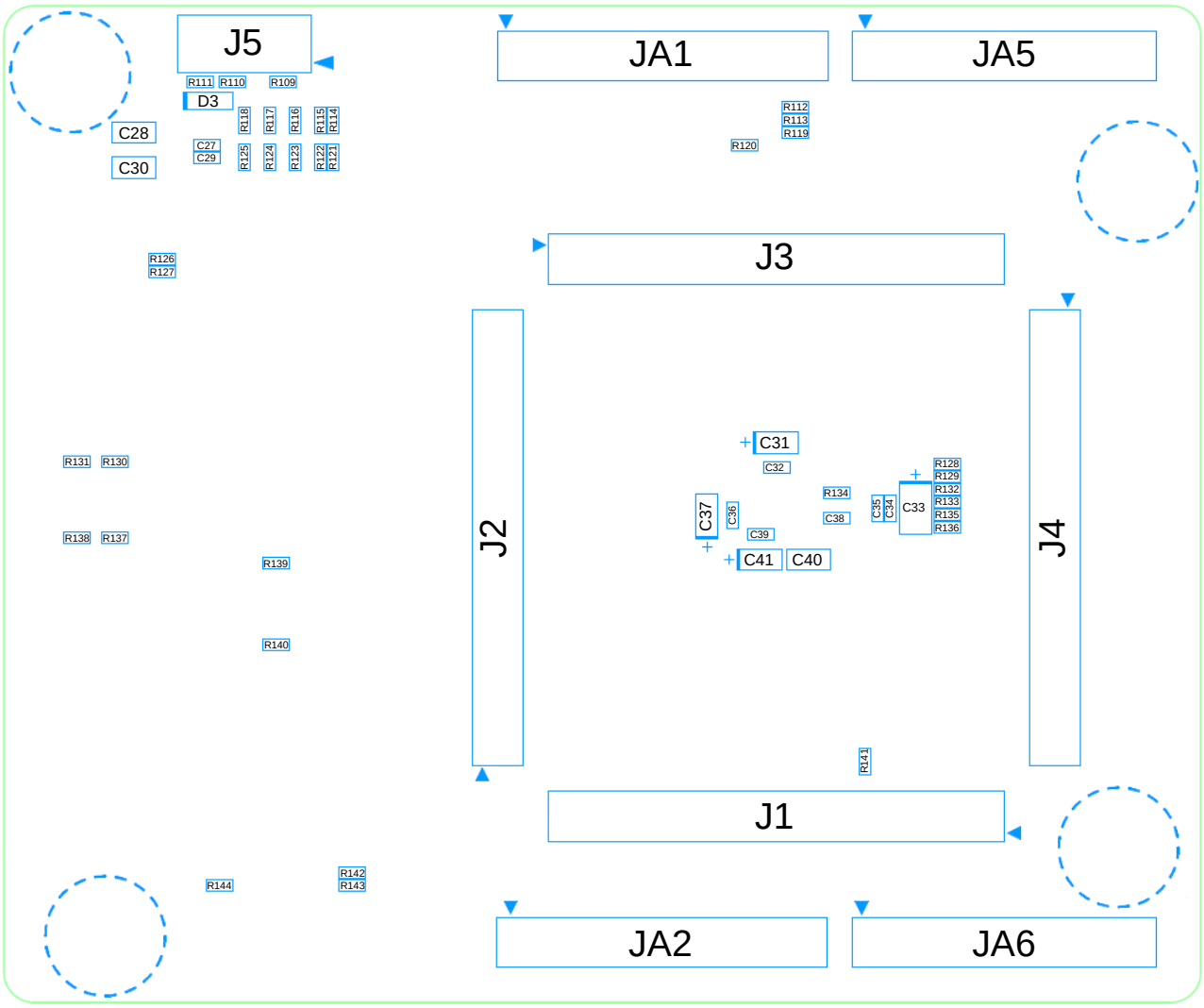

Figure 3-4 Bottom-Side Component Placement

4. Connectivity

4.1 Internal RSK Connections

The diagram below shows the RSK board components and their connectivity to the MCU.

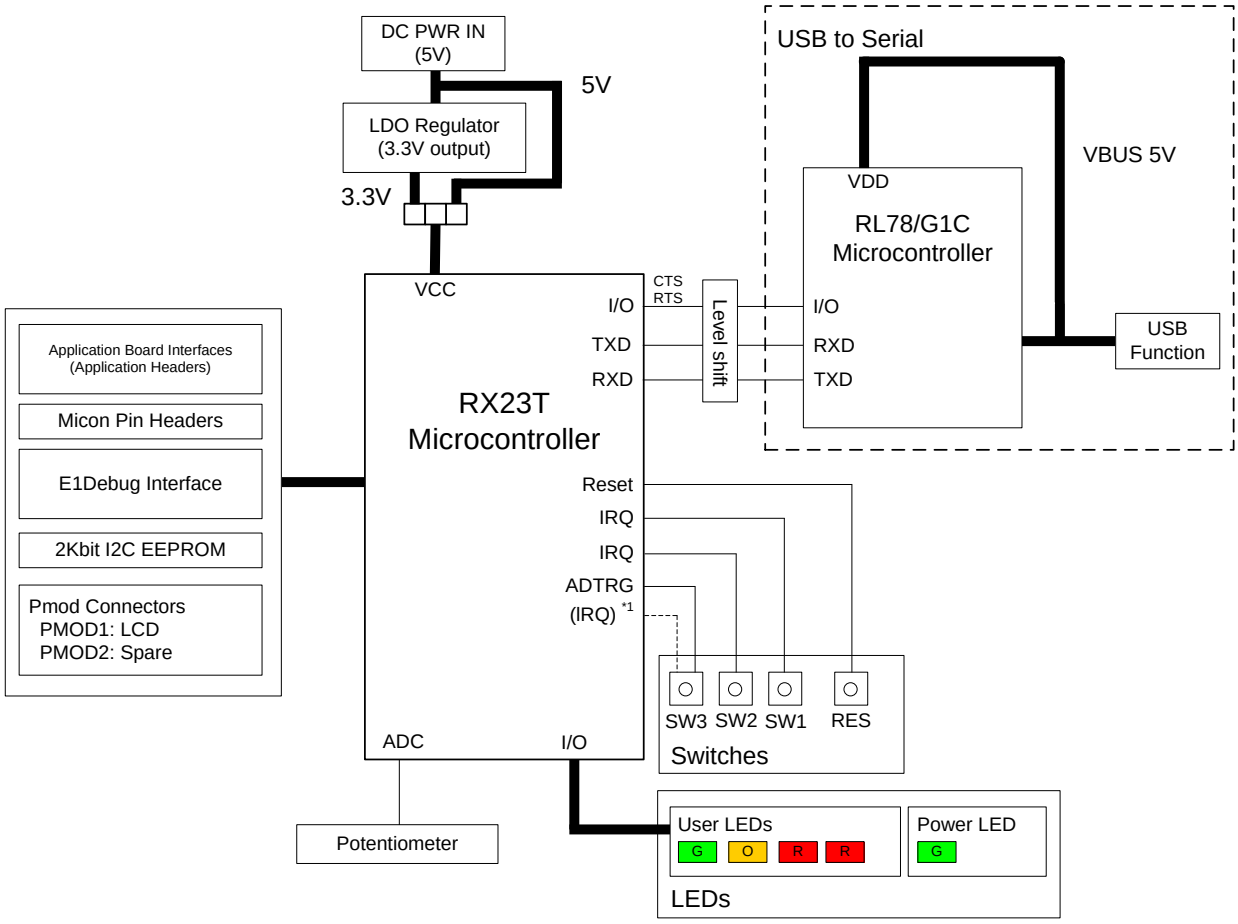

*1 : This connection is a not available in the default RSK configuration - refer to §6 for the required modifications.

Figure 4-1: Internal RSK Block Diagram

4.2 Debugger Connections

The diagram below shows the connections between the RSK, E1 debugger and the host PC.

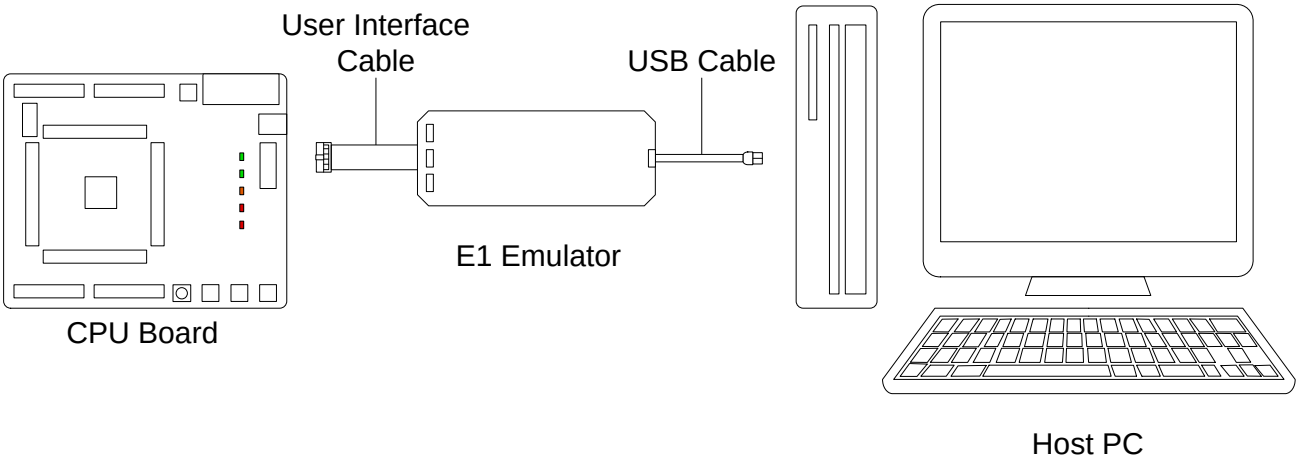

Figure 4-2: Debugger Connection Diagram

5. User Circuitry

5.1 Reset Circuit

A reset control circuit is fitted to the RSK to generate a reset signal from the RES switch. Refer to the RX23T hardware manual for details regarding the reset signal timing requirements, and the RSK schematics for information regarding the reset circuitry in use on the board.

5.2 Clock Circuit

A clock circuit is fitted to the RSK to generate the required clock signal to drive the MCU, and associated peripherals. Refer to the RX23T Group Hardware Manual for details regarding the clock signal requirements, and the RSKRX23T board schematics for information regarding the clock circuitry in use on the RSK. Details of the oscillators fitted to the board are listed in **Table 5-1** below.

Crystal	Function	Default Placement	Frequency	Device Package
X1	RX23T Main oscillator.	Fitted	20MHz	Encapsulated, SMT
X2	RL78/G1C Main oscillator	Fitted	12MHz	Encapsulated, SMT

Table 5-1: Oscillators

5.3 Switches

There are four switches located on the RSK board. The function of each switch and its connection is shown in **Table 5-2**. For further information regarding switch connectivity, refer to the RSK schematics.

Switch	Function	MCU	
		Signal (Port)	Pin
RES	When pressed, the microcontroller is reset	RES#	6
SW1	Connects to an IRQ input for user controls	IRQ5 (PD6)	13
SW2	Connects to an IRQ input for user controls.	IRQ2 (P00)	2
SW3	Connects to an IRQ input for user controls. *1	IRQ1 (P94)	29
	Connects to an ADTRG input.	ADTRG0# (PA4)	64

Table 5-2: Switch Connections

*1: This connection is a not available in the default RSK configuration - refer to §6 for the required modifications.

5.4 LEDs

There are five LEDs on the RSK. The function of each LED, its colour, and its connections are shown in **Table 5-3**.

LED	Colour	Function	MCU	
			Port	Pin
POWER	Green	Indicates the status of the Board_VCC power rail	-	-
LED0	Green	User operated LED	PA3	27
LED1	Orange	User operated LED	P71	38
LED2	Red	User operated LED	P72	37
LED3	Red	User operated LED	P73	36

Table 5-3: LED Connections

5.5 Potentiometer

A single-turn potentiometer is connected as a potential divider to analog input AN000 (Port P40, Pin 56). The potentiometer can be used to create a voltage between Board_VCC and ground.
Refer to the maker site for specification of the potentiometer (PIHER with part number N6 series).

The potentiometer offers an easy method of supplying a variable analog input to the microcontroller. It does not necessarily reflect the accuracy of the controller's ADC. Refer to the RX23T Group Hardware Manual for further details.

5.6 Pmod™

The RSK board are equipped with connectors for Digilent Pmod™ interface. Please connect the PMOD1 connector that is compatible with Debug LCD.

Care should be taken when installing the LCD module to ensure pins are not bent or damaged. The LCD module is vulnerable to electrostatic discharge (ESD); therefore appropriate ESD protection should be used.

The Digilent Pmod™ Compatible headers uses an SPI interface. **Figure 5-1** below shows Digilent Pmod™ Compatible Header Pin Numbering. Connection information for the Digilent Pmod™ Compatible header is provided in **Table 5-4 and Table 5-5** below.

Please note that the connector numbering adheres to the Digilent Pmod™ standard and is different from all other connectors on the RSK designs. Details can be found in the Digilent Pmod™ Interface Specification Revision: November 20, 2011.

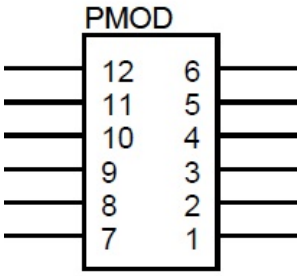

Figure 5-1: Digilent Pmod™ Compatible Header Pin Numbering

Digilent Pmod™ Compatible Header (PMOD1) Connections							
Pin	**Signal Name**	**MCU**		**Pin**	**Signal Name**	**MCU**	
		Port	**Pin**			**Port**	**Pin**
1	PMOD1_PIN1	PA2/P02	28/1	7	IRQ0	P93	30
2	P-TXD5	PB5	19	8	IRQ4	P01	4
3	P-RXD5	PB6	18	9	P91	P91	32
4	P-SCK5	PB7	17	10	P92	P92	31
5	GROUND	-	-	11	GROUND	-	-
6	Board_3V3	-	-	12	Board_3V3	-	-

Table 5-4: Pmod™1 Header Connections

Digilent Pmod™ Compatible Header (PMOD2) Connections							
Pin	**Signal Name**	**MCU**		**Pin**	**Signal Name**	**MCU**	
		Port	**Pin**			**Port**	**Pin**
1	PD7	PD7	12	7	P-IRQ2	P00	2
2	P-TXD5	PB5	19	8	P-IRQ3	PB4	21
3	P-RXD5	PB6	18	9	P30	P30	45
4	P-SCK5	PB7	17	10	P31	P31	43
5	GROUND	-	-	11	GROUND	-	-
6	Board_3V3	-	-	12	Board_3V3	-	-

Table 5-5: Pmod™2 Header Connections

5.7 USB Serial Port

A USB serial port is implemented in a Renesas low power microcontroller (RL78/G1C) and is connected to the RX23T Serial Communications Interface (SCI) module. Multiple options are provided to allow the selection of the connected SCI1 port. Connections between the USB to Serial converter and the microcontroller are listed in **Table 5-6** below.

Signal Name	Function	MCU	
		Port	Pin
TXD1	SCI1 Transmit Signal	PD3	16
RXD1	SCI1 Receive Signal	PD5	14
TXD5*[1]	SCI5 Transmit Signal	PB5	19
RXD5*[1]	SCI5 Receive Signal	PB6	18
RS232TX *[1]	External SCI Transmit Signal	-	-
RS232RX *[1]	External SCI Receive Signal	-	-
RL78G1CCTS	Clear To Send	PB4	21
RL78G1CRTS	Request to Send	PD7	12

Table 5-6: Serial Port Connections

*[1]: This connection is a not available in the default RSK configuration - refer to §6 for the required modifications.

When the RSK board is first connected to a PC running Windows with the USB/Serial connection, the PC will look for a driver. This driver is installed during the installation process, so the PC should be able to find it. The PC will report that it is installing for a driver and then report that a driver has been installed successfully, as shown in **Figure 5-2**. The exact messages may vary depending upon operating system.

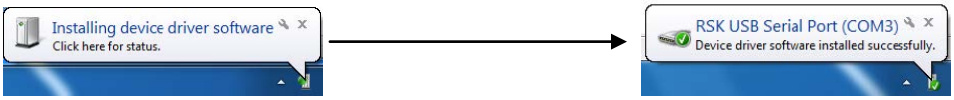

Figure 5-2: USB-Serial Windows Installation message

5.8 I²C Bus (Inter-IC Bus)

The RX23T features one I²C (Inter-IC Bus) interface modules. RIIC0 is connected to a 2Kbit EEPROM. Specific details of the EEPROM device and the connections can be found in the board schematics.

6. Configuration

6.1 Modifying the RSK

This section lists the option links that are used to modify the way RSK operates in order to access different configurations. Configurations are made by modifying link resistors or headers with movable jumpers or by configuration DIP switches

A link resistor is a 0Ω surface mount resistor, which is used to connect or isolate parts of a circuit. Option links are listed in the following sections, detailing their function when fitted or removed. **Bold, blue text** indicates the default configuration that the RSK is supplied with. Refer to the component placement diagram (§3) to locate the option links, jumpers and DIP switches.

When removing soldered components, always ensure that the RSK is not exposed to a soldering iron for intervals greater than 5 seconds. This is to avoid damage to nearby components mounted on the board.

When modifying a link resistor, always check the related option links to ensure there is no possible signal contention or short circuits. Because many of the MCU's pins are multiplexed, some of the peripherals must be used exclusively. Refer to the RX23T Group Hardware Manual and RSKRX23T schematics for further information.

6.2 MCU Operating Modes

Table 6-1 below details the option links associated with configuring the MCU operating modes.

Reference	Link Fitted Configuration	Link Removed Configuration	Related Ref.
J8	Boot Mode (SCI)	Single Chip Mode	-

Table 6-1: MCU Option Links

6.3 Power Supply Configuration

Table 6-2 and Table 6-3 below details the function of the option links associated with power supply configuration.

Reference	Jumper Position	Explanation	Related Ref.
J6 *1	Shorted Pin1-2	Connect Power rail via regulator.	R139*1
	Shorted Pin2-3	Direct connect Power rail.	R139*1
	All open	In case of fitted R139*1, same as "Jumper J6 shorted Pin1-2".	R139*1
J7 *2	Shorted	Connect Power rail.	R140
	Open	Enable current probe for MCU current consumption.	R140

Table 6-2: Power Supply Option Links (1)

*1: By default, jumper J6 is not fitted to the RSK. R139 is fitted by default and becomes the same setting as 'Connect Power rail via regulator'.
*2: By default, jumper J7 is not fitted to the RSK. R140 is fitted by default and becomes the same setting as 'Connect Power rail.

Items shown in **bold** are the Fit / Do Not Fit (DNF) default configuration that the RSK is supplied with.

Reference	Explanation	Fit	DNF	Related Ref.
PWR	Connect 5V power rail to PWR.	R38	-	U3
	Disconnect PWR from 5V power rail.	-	R38	-
Unregulated_VCC	Connect 5V power rail to Unregulated_VCC.	R52	-	U3
	Disconnect Unregulated_VCC from 5V power rail.	-	R52	-
CON_5V	Connect 5V power rail to CON_5V.	R39	-	U3
	Disconnect CON_5V from 5V power rail.	-	R39	-
Board_5V	Connect 5V power rail to Board_5V.	-	-	IIC pull-up(R8),U3,U4
CON_3V3	Connect 3.3V power rail to CON_3V3.	R48	-	-
	Disconnect CON_3V3 from 3.3V power rail.	-	R48	-
Board_3V3	Connect 3.3V power rail to Board_3V3.	-	-	IIC pull-up(R4),PMOD,U4
Board_VCC	Connect 3.3V power rail to Board_VCC.	-	-	U1
UC_VCC	Connect power rail to UC_VCC.	R140	-	U1
	Disconnect UC_VCC from power rail.	-	R140	-

Table 6-3: Power Supply Option Links (2)

6.4 Clock Configuration

Table 6-4 below details the function of the option links associated with clock configuration.

Reference	Explanation	Fit	DNF	Related Ref.
XTAL, EXTAL, CON_EXTAL	Connect crystal (X1) to RX23T.	R59, R61	R62, R58	U1(EXTAL, XTAL)
	Connect CON_EXTAL to RX23T.	R62	R59, R61	U1(EXTAL),JA2.2

Table 6-4: Clock Option Links

6.5 Analog Power & ADC & Comparator Configuration

Table 6-5 below details the function of the option links associated with Analog Power & ADC & Comparator configuration.

Signal name	MCU		MCU Peripheral Selection			Destination Selection		
	Pin	Port	Signal	Fit	DNF	Interface /Function	Fit	DNF
MTIOC3A_CVREF0	61	P11	MTIOC3A	R44	R45	JA6.13	-	-
			CVREF0	R45	R44	JA6.18	-	-
AN000	56	P40	-	-	-	RV1	R134	-
						JA1.9	-	-
ADTRG0n	64	PA4	-	-	-	SW3	R103	R102
						JA1.8	-	-
AVCC0	57	-	UC_VCC	R132	R129, R133	-	-	-
			CON_AVCC0	R133	R129, R132	JA1.5	-	-
			Board_VCC	R129, R128	R132, R133	-	-	-
AVSS0	60	-	GROUND	R136	R135	-	-	-
			CON_AVSS0	R135	R136	JA1.6	R41	R42
VREFH0	58	-	UC_VCC	R46	R47	-	-	-
			CON_VREFH0	R47	R46	JA1.7	-	-
VREFL0	59	-	GROUND	R51	R50	-	-	-
			CON_VREFL0	R50	R51	JA1.6	R42	R41

Table 6-5: Analog Power ADC & Comparator Option Links

Items shown in **bold** are the Fit / Do Not Fit (DNF) default configuration that the RSK is supplied with.

6.6 E1 Debugger Configuration

Table 6-6 below details the function of the option links associated with E1 Debugger configuration.

Signal name	MCU		MCU Peripheral Selection			Destination Selection		
	Pin	Port	Signal	Fit	DNF	Interface /Function	Fit	DNF
TXD1	16	PD3	-	-	-	JA2.6	-	-
						E1.5	R130	R19
						U6.3	R19	R16,R20,R130
RXD1	14	PD5	-	-	-	JA2.8	-	-
						E1.11	R137	R36
						U5.3	R36	R27,R37,R137

Table 6-6: E1 Debugger Option Links

6.7 General I/O & LED Configuration

Table 6-7 below details the function of the option links associated with the General I/O & LED configuration.

Signal name	MCU		MCU Peripheral Selection			Destination Selection		
	Pin	Port	Signal	Fit	DNF	Interface /Function	Fit	DNF
P02	1	P02	-	-	-	PMOD1.1	R87	R88
IO0_MTIC5W	48	P22	IO0	R11	R28	JA1.15	-	-
			MTIC5W	R28	R11	JA6.16	-	-
IO1_MTIC5V	47	P23	IO1	R12	R29	JA1.16	-	-
			MTIC5V	R29	R12	JA6.15	-	-
IO2_MTIC5U	46	P24	IO2	R13	R30	JA1.17	-	-
			MTIC5U	R30	R13	JA6.14	-	-
P30_MTIOC0B	45	P30	P30	R14	R31	PMOD2.9	-	-
			MTIOC0B	R31	R14	JA2.9	R98	R97
P31_MTIOC0A	43	P31	P31	R15	R32	PMOD2.10	-	-
			MTIOC0A	R32	R15	JA2.19	R95	R100
						JA2.7	R100	R99
MTIOC3B	38	P71	-	-	-	LED1	-	-
						JA2.13	-	-
MTIOC4A	37	P72	-	-	-	LED2	-	-
						JA2.15	-	-
MTIOC4B	36	P73	-	-	-	LED3	-	-
						JA2.17	-	-
IO3_MTIOC0C_IRQ1	29	P94	IO3	R56	R55	JA1.18	-	-
			MTIOC0C_IRQ1	R55	R56	SW3	R102	R103
						JA2.23	R93	R94
IO4_MTIOC2B_CTS5RTS5	28	PA2	IO4	R54	R63,R64	JA1.19	-	-
			MTIOC2B	R64	R54,R63	JA2.22	-	-
			CTS5RTS5	R63	R54,R64	PMOD1.1	R88	R87
IO5_MTIOC2A	27	PA3	-	-	-	LED0	-	-
			IO5	R65	R68	JA1.20	-	-
			MTIOC2A	R68	R65	JA2.20	-	-
IO6_MTIOC0D	26	PB0	IO6	R70	R67	JA1.21	-	-
			MTIOC0D	R67	R70	JA2.21	-	-
PD7_RL78G1CRTS	12	PD7	PD7	R77	R78	PMOD2.1	-	-
			RL78G1CRTS	R78	R77	U6.2	-	-

Table 6-7: General I/O & LED Option Links

Items shown in **bold** are the Fit / Do Not Fit (DNF) default configuration that the RSK is supplied with.

6.8 I²C & EEPROM Configuration

Table 6-8 below details the function of the option links associated with I²C & EEPROM configuration.

Signal name /Reference	MCU		MCU Peripheral Selection			Destination Selection		
	Pin	Port	Signal	Fit	DNF	Interface /Function	Fit	DNF
SCL	25	PB1	-	-	-	U4.6	-	-
						JA1.26	-	-
SDA	24	PB2	-	-	-	U4.5	-	-
						JA1.25	-	-
Board_5V (Pull-up)	-	-	-	R8	R4	SDA, SCL, U4	-	-
Board_3V3 (Pull-up)	-	-	-	R4	R8	SDA, SCL, U4	-	-
Write Protect ON	-	-	-	-	R3	U4.7	-	-
Write Protect OFF	-	-	-	R3	-	U4.7	-	-

Table 6-8: I²C & EEPROM Option Links

6.9 IRQ & Switch Configuration

Table 6-9 below details the function of the option links associated with the IRQ & Switches configuration.

Signal name	MCU		MCU Peripheral Selection			Destination Selection		
	Pin	Port	Signal	Fit	DNF	Interface /Function	Fit	DNF
A-IRQ2_P-IRQ2	2	P00	-	-	-	SW2	R104	-
			A-IRQ2	R74	R75	JA2.7	R99	R100
			P-IRQ2	R75	R74	PMOD2.7	-	-
IO3_MTIOC0C_IRQ1	29	P94	IO3	R56	R55	JA1.18	-	-
			MTIOC0C_IRQ1	R55	R56	SW3	R102	R103
						JA2.23	R93	R94
ADTRG0n	64	PA4	-	-	-	SW3	R103	R102
						JA1.8	-	-
RL78G1CCTS_A-IRQ3_P-IRQ3	21	PB4	RL78G1CCTS	R71	R72,R73	U5.2	-	-
			A-IRQ3	R72	R71,R73	JA2.9	R97	R98
			P-IRQ3	R73	R71,R72	PMOD2.8	-	-
CTS1RTS1_IRQ5	13	PD6	CTS1RTS1	R91	R90	JA2.12	-	-
			IRQ5	R90	R91	JA1.23	-	-
						SW1	R105	-

Table 6-9: IRQ & Switch Option Links

Items shown in **bold** are the Fit / Do Not Fit (DNF) default configuration that the RSK is supplied with.

6.10 MTU & POE Configuration

Table 6-10 below details the function of the option links associated with MTU & POE configuration.

Signal name	MCU		MCU Peripheral Selection			Destination Selection		
	Pin	Port	Signal	Fit	DNF	Interface /Function	Fit	DNF
MTIOC3A_CVREF0	61	P11	MTIOC3A	R44	R45	JA6.13	-	-
			CVREF0	R45	R44	JA6.18	-	-
IO0_MTIC5W	48	P22	IO0	R11	R28	JA1.15	-	-
			MTIC5W	R28	R11	JA6.16	-	-
IO1_MTIC5V	47	P23	IO1	R12	R29	JA1.16	-	-
			MTIC5V	R29	R12	JA6.15	-	-
IO2_MTIC5U	46	P24	IO2	R13	R30	JA1.17	-	-
			MTIC5U	R30	R13	JA6.14	-	-
P30_MTIOC0B	45	P30	P30	R14	R31	PMOD2.9	-	-
			MTIOC0B	R31	R14	JA2.9	R98	R97
P31_MTIOC0A	43	P31	P31	R15	R32	PMOD2.10	-	-
			MTIOC0A	R32	R15	JA2.19	R95	R100
						JA2.7	R100	R99
MTCLKB_MTIOC3C	41	P32	MTCLKB	R33	R34	JA2.26	-	-
			MTIOC3C	R34	R33	JA2.11	-	-
POE0n	39	P70	-	-	-	JA2.24	R35	-
MTIOC3B	38	P71	-	-	-	LED1	-	-
						JA2.13	-	-
MTIOC4A	37	P72	-	-	-	LED2	-	-
						JA2.15	-	-
MTIOC4B	36	P73	-	-	-	LED3	-	-
						JA2.17	-	-
IO3_MTIOC0C_IRQ1	29	P94	IO3	R56	R55	JA1.18	-	-
			MTIOC0C_IRQ1	R55	R56	SW3	R102	R103
						JA2.23	R93	R94
IO4_MTIOC2B_CTS5RTS5	28	PA2	IO4	R54	R63,R64	JA1.19	-	-
			MTIOC2B	R64	R54,R63	JA2.22	-	-
			CTS5RTS5	R63	R54,R64	PMOD1.1	R88	R87
IO5_MTIOC2A	27	PA3	-	-	-	LED0	-	-
			IO5	R65	R68	JA1.20	-	-
			MTIOC2A	R68	R65	JA2.20	-	-
MTIOC1A	63	PA5	-	-	-	JA2.23	R94	R93
IO6_MTIOC0D	26	PB0	IO6	R70	R67	JA1.21	-	-
			MTIOC0D	R67	R70	JA2.21	-	-

Table 6-10: MTU & POE Option Links

Items shown in **bold** are the Fit / Do Not Fit (DNF) default configuration that the RSK is supplied with.

6.11 PMOD1 Interface Configuration

Table 6-11 below details the function of the option links associated with PMOD1 Interface configuration.

Signal name	MCU		MCU Peripheral Selection			Destination Selection		
	Pin	Port	Signal	Fit	DNF	Interface /Function	Fit	DNF
P02	1	P02	-	-	-	PMOD1.1	R87	R88
IO4_MTIOC2B_CTS5RTS5	28	PA2	IO4	R54	R63,R64	JA1.19	-	-
			MTIOC2B	R64	R54,R63	JA2.22	-	-
			CTS5RTS5	R63	R54,R64	PMOD1.1	R88	R87
A-TXD5_P-TXD5	19	PB5	A-TXD5	R81	R82	JA6.8	-	-
						U6.3	R20	R16,R19
			P-TXD5	R82	R81	PMOD1.2	-	-
						PMOD2.2	-	-
A-RXD5_P-RXD5	18	PB6	A-RXD5	R85	R84	JA6.7	-	-
						U5.3	R37	R27,R36
			P-RXD5	R84	R85	PMOD1.3	-	-
						PMOD2.3	-	-
A-SCK5_P-SCK5	17	PB7	A-SCK5	R80,R83	R86	JA6.10	-	-
			P-SCK5	R83,R86	R80	PMOD1.4	-	-
						PMOD2.4	-	-

Table 6-11: PMOD1 Interface Option Links

6.12 PMOD2 Interface Configuration

Table 6-12 below details the function of the option links associated with PMOD2 Interface configuration.

Signal name	MCU		MCU Peripheral Selection			Destination Selection		
	Pin	Port	Signal	Fit	DNF	Interface /Function	Fit	DNF
A-IRQ2_P-IRQ2	2	P00	-	-	-	SW2	R104	-
			A-IRQ2	R74	R75	JA2.7	R99	R100
			P-IRQ2	R75	R74	PMOD2.7	-	-
P30_MTIOC0B	45	P30	P30	R14	R31	PMOD2.9	-	-
			MTIOC0B	R31	R14	JA2.9	R98	R97
P31_MTIOC0A	43	P31	P31	R15	R32	PMOD2.10	-	-
			MTIOC0A	R32	R15	JA2.19	R95	R100
						JA2.7	R100	R99
RL78G1CCTS_A-IRQ3_P-IRQ3	21	PB4	RL78G1CCTS	R71	R72,R73	U5.2	-	-
			A-IRQ3	R72	R71,R73	JA2.9	R97	R98
			P-IRQ3	R73	R71,R72	PMOD2.8	-	-
A-TXD5_P-TXD5	19	PB5	A-TXD5	R81	R82	JA6.8	-	-
						U6.3	R20	R16,R19
			P-TXD5	R82	R81	PMOD1.2	-	-
						PMOD2.2	-	-
A-RXD5_P-RXD5	18	PB6	A-RXD5	R85	R84	JA6.7	-	-
						U5.3	R37	R27,R36
			P-RXD5	R84	R85	PMOD1.3	-	-
						PMOD2.3	-	-
A-SCK5_P-SCK5	17	PB7	A-SCK5	R80,R83	R86	JA6.10	-	-
			P-SCK5	R83,R86	R80	PMOD1.4	-	-
						PMOD2.4	-	-
PD7_RL78G1CRTS	12	PD7	PD7	R77	R78	PMOD2.1	-	-
			RL78G1CRTS	R78	R77	U6.2	-	-

Table 6-12: PMOD2 Interface Option Links

Items shown in **bold** are the Fit / Do Not Fit (DNF) default configuration that the RSK is supplied with.

6.13 Serial & USB to Serial Configuration

Table **6-13** below details the function of the option links associated with Serial & USB to Serial configuration.

Signal name	MCU		MCU Peripheral Selection			Destination Selection		
	Pin	Port	Signal	Fit	DNF	Interface /Function	Fit	DNF
A-TXD5_P-TXD5	19	PB5	A-TXD5	R81	R82	JA6.8	-	-
						U6.3	R20	R16,R19
			P-TXD5	R82	R81	PMOD1.2	-	-
						PMOD2.2	-	-
A-RXD5_P-RXD5	18	PB6	A-RXD5	R85	R84	JA6.7	-	-
						U5.3	R37	R27,R36
			P-RXD5	R84	R85	PMOD1.3	-	-
						PMOD2.3	-	-
TXD1	16	PD3	-	-	-	JA2.6	-	-
						E1.5	R130	R19
						U6.3	R19	R16,R20,R130
RXD1	14	PD5	-	-	-	JA2.8	-	-
						E1.11	R137	R36
						U5.3	R36	R27,R37,R137
RS232TX	-	-	-	-	-	JA6.5	-	-
						U6.3	R16	R19,R20
RS232RX	-	-	-	-	-	JA6.6	-	-
						U5.3	R27	R36,R37

Table 6-13: Serial & USB to Serial Option Links

Items shown in **bold** are the Fit / Do Not Fit (DNF) default configuration that the RSK is supplied with.

7. Headers

7.1 Application Headers

This RSK is fitted with application headers, which can be used to connect compatible Renesas application devices or as easy access to MCU pins.

Table 7-1 below lists the connections of the application header, JA1.

Application Header JA1					
Pin	**Header Name** / **Circuit Net Name**	**MCU Pin**	**Pin**	**Header Name** / **Circuit Net Name**	**MCU Pin**
1	5V / CON_5V	-	2	0V / GROUND	-
3	3V3 / CON_3V3	-	4	0V / GROUND	-
5	AVCC / CON_AVCC0	57	6	AVSS / CON_AVSS0/CON_VREFL0	60/59
7	AVREF / CON_VREFH0	58	8	ADTRG / ADTRG0n	64
9	ADC0 / AN000	56	10	ADC1 / AN001	55
11	ADC2 / AN002	54	12	ADC3 / AN003	53
13	DAC0 / NC	NC	14	DAC1 / NC	NC
15	IO_0 / IO0	48	16	IO_1 / IO1	47
17	IO_2 / IO2	46	18	IO_3 / IO3	29
19	IO_4 / IO4	28	20	IO_5 / IO5	27
21	IO_6 / IO6	26	22	IO_7 / IO7	23
23	IRQ3/IRQAEC/M2_HSIN0 / IRQ5	13	24	IIC_EX / NC	NC
25	IIC_SDA / JA1_SDA (SDA)	24	26	IIC_SCL / JA1_SCL (SCL)	25

Table 7-1: Application Header JA1 Connections

Table 7-2 below lists the connections of the application header, JA2.

Application Header JA2					
Pin	**Header Name** **Circuit Net Name**	**MCU Pin**	**Pin**	**Header Name** **Circuit Name**	**MCU Pin**
1	RESET RESn	6	2	EXTAL CON_EXTAL	9
3	NMI NMIn	11	4	Vss1 GROUND	-
5	WDT_OVF NC	NC	6	SCIaTX TXD1	16
7	IRQ/WKUP/M_HSIN A-IRQ2/NC/MTIOC0A	2/43	8	SCIaRX RXD1	14
9	IRQ1/M1_HSIN1 A-IRQ3/MTIOC0B	21/45	10	SCIaCK SCK1	15
11	M1_UD MTIOC3C	41	12	CTSRTS CTS1RTS1	13
13	M1_UP MTIOC3B	38	14	M1_UN MTIOC3D	35
15	M1_VP MTIOC4A	37	16	M1_VN MTIOC4C	34
17	M1_WP MTIOC4B	36	18	M1_WN MTIOC4D	33
19	TimerOut MTIOC0A	43	20	TimerOut MTIOC2A	27
21	TimerIn MTIOC0D	26	22	TimerIn MTIOC2B	28
23	IRQ2/M1_EncZ/M1_HSIN2 MTIOC0C_IRQ1/MTIOC1A /MTIOC0C_IRQ1	29/63/29	24	M1_POE POE0n	39
25	M1_TRxCLK MTCLKA	40	26	M1_TRDCLK MTCLKB	41

Table 7-2: Application Header JA2 Connections

Table 7-3 below lists the connections of the application header, JA5.

Application Header JA5					
Pin	**Header Name** / **Circuit Net Name**	**MCU Pin**	**Pin**	**Header Name** / **Circuit Net Name**	**MCU Pin**
1	ADC4 / AN004	52	2	ADC5 / AN005	51
3	ADC6 / AN006	50	4	ADC7 / AN007	49
5	CAN1TX / NC	NC	6	CAN1RX / NC	NC
7	CAN2TX / NC	NC	8	CAN2RX / NC	NC
9	IRQ4/M2_EncZ/M2_HSIN1 / NC/NC/NC	NC/NC/NC	10	IRQ5/M2_HSIN2 / NC/NC	NC/NC
11	M2_UD / NC	NC	12	M2_Uin / NC	NC
13	M2_Vin / NC	NC	14	M2_Win / NC	NC
15	M2_Toggle / NC	NC	16	M2_POE / NC	NC
17	M2_TRCCLK / NC	NC	18	M2_TRDCLK / NC	NC
19	M2_UP / NC	NC	20	M2_UN / NC	NC
21	M2_VP / NC	NC	22	M2_VN / NC	NC
23	M2_WP / NC	NC	24	M2_WN / NC	NC

Table 7-3: Application Header JA5 Connections

Table 7-4 below lists the connections of the application header, JA6.

Application Header JA6					
Pin	**Header Name** / **Circuit Net Name**	**MCU Pin**	**Pin**	**Header Name** / **Circuit Net Name**	**MCU Pin**
1	DREQ / NC	NC	2	DACK / NC	NC
3	TEND / NC	NC	4	STBYn / NC	NC
5	RS232TX / RS232TX	NC	6	RS232RX / RS232RX	NC
7	SCIbRX / A-RXD5	18	8	SCIbTX / A-TXD5	19
9	SCIcTX / NC	NC	10	SCIbCK / A-SCK5	17
11	SCIcCK / NC	NC	12	SCIcRX / NC	NC
13	M1_Toggle / MTIOC3A	61	14	M1_Uin / MTIC5U	46
15	M1_Vin / MTIC5V	47	16	M1_Win / MTIC5W	48
17	Reserved / NC	NC	18	Reserved / CVREF0	61
19	Reserved / NC	NC	20	Reserved / CVREF1	62
21	Reserved / NC	NC	22	Reserved / NC	NC
23	Unregulated_VCC / Unregulated_VCC	-	24	Vss / GROUND	-

Table 7-4: Application Header JA6 Connections

7.2 Microcontroller Pin Headers

This RSK is fitted with MCU pin headers, which are used to access all the MCU's pins.

Table 7-5 below lists the connections of the microcontroller pin header, J1.

Microcontroller Pin Header J1					
Pin	**Circuit Net Name**	**MCU Pin**	**Pin**	**Circuit Net Name**	**MCU Pin**
1	P02	1	2	A-IRQ2_P-IRQ2	2
3	NC	NC	4	IRQ4	4
5	MD_FINED	5	6	RESn	6
7	CON_XTAL	7	8	GROUND	-
9	CON_EXTAL	9	10	UC_VCC	-
11	NMIn	11	12	PD7_RL78G1CRTS	12
13	CTS1RTS1_IRQ5	13	14	RXD1	14
15	SCK1	15	16	TXD1	16
17	NC	NC	18	NC	NC
19	NC	NC	20	NC	NC
21	NC	NC	22	NC	NC
23	NC	NC	24	NC	NC
25	NC	NC	26	NC	NC
27	NC	NC	28	NC	NC
29	NC	NC	30	NC	NC
31	NC	NC	32	NC	NC
33	NC	NC	34	NC	NC
35	NC	NC	36	NC	NC

Table 7-5: Microcontroller Pin Header, J1

Table 7-6 below lists the connections of the microcontroller pin header, J2.

Microcontroller Pin Header J2					
Pin	**Circuit Net Name**	**MCU Pin**	**Pin**	**Circuit Net Name**	**MCU Pin**
1	A-SCK5_P-SCK5	17	2	A-RXD5_P-RXD5	18
3	A-TXD5_P-TXD5	19	4	UC_VCC	-
5	RL78G1CCTS_A-IRQ3_P-IRQ3	21	6	GROUND	-
7	IO7	23	8	SDA	24
9	SCL	25	10	IO6_MTIOC0D	26
11	IO5_MTIOC2A	27	12	IO4_MTIOC2B_CTS5RTS5	28
13	IO3_MTIOC0C_IRQ1	29	14	IRQ0	30
15	P92	31	16	P91	32
17	NC	NC	18	NC	NC
19	NC	NC	20	NC	NC
21	NC	NC	22	NC	NC
23	NC	NC	24	NC	NC
25	NC	NC	26	NC	NC
27	NC	NC	28	NC	NC
29	NC	NC	30	NC	NC
31	NC	NC	32	NC	NC
33	NC	NC	34	NC	NC
35	NC	NC	36	NC	NC

Table 7-6: Microcontroller Pin Header, J2

Table 7-7 below lists the connections of the microcontroller pin header, J3.

Microcontroller Pin Header J3					
Pin	**Circuit Net Name**	**MCU Pin**	**Pin**	**Circuit Net Name**	**MCU Pin**
1	MTIOC4D	33	2	MTIOC4C	34
3	MTIOC3D	35	4	MTIOC4B	36
5	MTIOC4A	37	6	MTIOC3B	38
7	POE0n	39	8	MTCLKA	40
9	MTCLKB_MTIOC3C	41	10	UC_VCC	-
11	P31_MTIOC0A	43	12	GROUND	-
13	P30_MTIOC0B	45	14	IO2_MTIC5U	46
15	IO1_MTIC5V	47	16	IO0_MTIC5W	48
17	NC	NC	18	NC	NC
19	NC	NC	20	NC	NC
21	NC	NC	22	NC	NC
23	NC	NC	24	NC	NC
25	NC	NC	26	NC	NC
27	NC	NC	28	NC	NC
29	NC	NC	30	NC	NC
31	NC	NC	32	NC	NC
33	NC	NC	34	NC	NC
35	NC	NC	36	NC	NC

Table 7-7: Microcontroller Pin Header, J3

Table 7-8 below lists the connections of the microcontroller pin header, J4.

Microcontroller Pin Header J4					
Pin	**Circuit Net Name**	**MCU Pin**	**Pin**	**Circuit Net Name**	**MCU Pin**
1	AN007	49	2	AN006	50
3	AN005	51	4	AN004	52
5	AN003	53	6	AN002	54
7	AN001	55	8	AN000	56
9	CON_AVCC0	57	10	CON_VREFH0	58
11	CON_VREFL0	59	12	CON_AVSS0	60
13	MTIOC3A_CVREF0	61	14	CVREF1	62
15	MTIOC1A	63	16	ADTRG0n	64
17	NC	NC	18	NC	NC
19	NC	NC	20	NC	NC
21	NC	NC	22	NC	NC
23	NC	NC	24	NC	NC
25	NC	NC	26	NC	NC
27	NC	NC	28	NC	NC
29	NC	NC	30	NC	NC
31	NC	NC	32	NC	NC
33	NC	NC	34	NC	NC
35	NC	NC	36	NC	NC

Table 7-8: Microcontroller Pin Header, J4

8. Code Development

8.1 Overview

For all code debugging using Renesas software tools, the RSK board must be connected to a PC via an E1/E20 debugger. An E1 debugger is supplied with this RSK product.

For further information regarding the debugging capabilities of the E1/E20 debuggers, refer to E1/E20 Emulator Additional Document for User's Manual (R20UT0399EJ).

8.2 Compiler Restrictions

The compiler supplied with this RSK is fully functional for a period of 60 days from first use. After the first 60 days of use have expired, the compiler will default to a maximum of 128k code and data. To use the compiler with programs greater than this size you need to purchase the full tools from your distributor.

The protection software for the compiler will detect changes to the system clock. Changes to the system clock back in time may cause the trial period to expire prematurely.

8.3 Mode Support

The MCU supports Single Chip and Boot modes (SCI), which are configured on the RSK board. Details of the modifications required can be found in §6.2. All other MCU operating modes are configured within the MCU's registers, which are listed in the RX23T group hardware manual.

Only change the MCU operating mode whilst the RSK is in reset, or turned off; otherwise the MCU may become damaged as a result.

8.4 Debugging Support

The E1 emulator (as supplied with this RSK) supports break points, event points (including mid-execution insertion) and basic trace functionality. It is limited to a maximum of 8 on-chip event points, 256 software breaks and 256 branch/cycle trace. For further details, refer RX Family E1/E20 Emulator User's Manual (R20UT0398EJ).

8.5 Address Space

For the MCU address space details, refer to the 'Address Space' section of RX23T Group Hardware Manual.

9. Additional Information

Technical Support
For information about the RX23T Group microcontrollers refer to the RX23T Group Hardware Manual.

For information about the RX assembly language, refer to the RX Family Software Manual.

Technical Contact Details

***Please refer to the contact details listed in section 8 of the* "Quick Start Guide"**

General information on Renesas Microcontrollers can be found on the Renesas website at:
http://www.renesas.com/

Trademarks
All brand or product names used in this manual are trademarks or registered trademarks of their respective companies or organisations.

Copyright

REVISION HISTORY	RSKRX23T User's Manual

Rev.	Date	Description	
		Page	Summary
1.00	Aug 24, 2015	—	First Edition issued

Renesas Starter Kit Manual: User's Manual

Publication Date: Rev.1.00 Aug 24, 2015

Published by: Renesas Electronics Corporation

SALES OFFICES Renesas Electronics Corporation http://www.renesas.com

Refer to "http://www.renesas.com/" for the latest and detailed information.

Renesas Electronics America Inc.
2801 Scott Boulevard Santa Clara, CA 95050-2549, U.S.A.
Tel: +1-408-588-6000, Fax: +1-408-588-6130

Renesas Electronics Canada Limited
9251 Yonge Street, Suite 8309 Richmond Hill, Ontario Canada L4C 9T3
Tel: +1-905-237-2004

Renesas Electronics Europe Limited
Dukes Meadow, Millboard Road, Bourne End, Buckinghamshire, SL8 5FH, U.K
Tel: +44-1628-585-100, Fax: +44-1628-585-900

Renesas Electronics Europe GmbH
Arcadiastrasse 10, 40472 Düsseldorf, Germany
Tel: +49-211-6503-0, Fax: +49-211-6503-1327

Renesas Electronics (China) Co., Ltd.
Room 1709, Quantum Plaza, No.27 ZhiChunLu Haidian District, Beijing 100191, P.R.China
Tel: +86-10-8235-1155, Fax: +86-10-8235-7679

Renesas Electronics (Shanghai) Co., Ltd.
Unit 301, Tower A, Central Towers, 555 Langao Road, Putuo District, Shanghai, P. R. China 200333
Tel: +86-21-2226-0888, Fax: +86-21-2226-0999

Renesas Electronics Hong Kong Limited
Unit 1601-1611, 16/F., Tower 2, Grand Century Place, 193 Prince Edward Road West, Mongkok, Kowloon, Hong Kong
Tel: +852-2265-6688, Fax: +852 2886-9022

Renesas Electronics Taiwan Co., Ltd.
13F, No. 363, Fu Shing North Road, Taipei 10543, Taiwan
Tel: +886-2-8175-9600, Fax: +886 2-8175-9670

Renesas Electronics Singapore Pte. Ltd.
80 Bendemeer Road, Unit #06-02 Hyflux Innovation Centre, Singapore 339949
Tel: +65-6213-0200, Fax: +65-6213-0300

Renesas Electronics Malaysia Sdn.Bhd.
Unit 1207, Block B, Menara Amcorp, Amcorp Trade Centre, No. 18, Jln Persiaran Barat, 46050 Petaling Jaya, Selangor Darul Ehsan, Malaysia
Tel: +60-3-7955-9390, Fax: +60-3-7955-9510

Renesas Electronics India Pvt. Ltd.
No.777C, 100 Feet Road, HALII Stage, Indiranagar, Bangalore, India
Tel: +91-80-67208700, Fax: +91-80-67208777

Renesas Electronics Korea Co., Ltd.
12F., 234 Teheran-ro, Gangnam-Gu, Seoul, 135-080, Korea
Tel: +82-2-558-3737, Fax: +82-2-558-5141

Colophon 4.0

RX23T Group

Renesas Electronics Corporation

R20UT3318EG0100